Worldwide Sumitomo Network

U.S.A.
Sumitomo Machinery Corporation of America (SMA)
4200 Holland Blvd. Chesapeake, VA 23323, U.S.A.
Tel: (1)757-485-8218
Fax: (1)757-485-7490

Argentina
SM-Cyclo de Argentina S.A. (SMAR)
Montes de Oca #6719, (B1606BMG)Munro,
Buenos Aires, Argentina
Tel: (54)11-4765-5332
Fax: (54)11-4765-5517

Brazil
SM-Cyclo Reductores do Brasil, Ltda. (SMBR)
Av. Fagundes Filho, 191 Metro Sao Judas
Edificio Houston-Sala H123 Sao Paulo-SP
Brasil 04304-010
Tel: (55)11-5585-3600
Fax: (55)11-5585-9990

Chile
SM-Cyclo de Chile, Ltda. (SMCH)
San Pablo Ave, 3507 Quinta Nomal, Santiago, Chile
Tel: (56)2-892-7000
Fax: (56)2-892-7001

Mexico
SM-Cyclo de Mexico, S.A. de C.V. (SMME)
Calle "C" No. 506A Parque Industrial
Almacentro Apodaca, N. L., Mexico 66600
Tel: (52)81-8144-5130
Fax: (52)81-8369-3699

Canada
SM-Cyclo of Canada, Ltd. (SMC)
1045 South Service Road West, Oakville, Ontario,
Canada L6L 6K3
Tel: (1)905-469-1050
Fax: (1)905-469-1055

Germany
Sumitomo(SHI) Cyclo Drive Germany GmbH (SCG)
Cyclostraße 92, 85229 Markt Indersdorf, Germany
Tel: (49)8136-66-0
Fax: (49)8136-5771

Austria
SCG Branch Austria Office
Gruentalerstraße 30A, 4020 Linz, Austria
Tel: (43)732-330958
Fax: (43)732-331978

Benelux
SCG Branch Benelux Office
Office Heikneuterlaan 23, 3010 Kessel-Lo/Leuven,
Belgium
Tel: (32)16 60 83 11
Fax: (32)16 57 16 39

France
SM-Cyclo France E.U.R.L. (SMFR)
65-75 Avenue Jean Mermoz, Espace Primagaz, 93126
La Courneuve, France
Tel: (33)149-929494
Fax: (33)149-929490

Italy
SM-Cyclo Italy Srl (SMIT)
Via dell' Artigianato 23, 20010 Cornaredo(MI), Italy
Tel: (39)02-9356-2121
Fax: (39)02-9356-9893

Spain
SM-Cyclo Iberia, S.L. (SMIB)
Edificio Gobelas, C/Landabarri, n° 4 Escalera 1, 2° Izqda,
Leioa 48940 Vizcaya, Spain
Tel: (34)944-805389
Fax: (34)944-801550

Sweden
SM-Cyclo Scandinavia AB (SMSC)
Ridbanegatan 4, S-21377 Malmö, Sweden
Tel: (46)40220030
Fax: (46)40220035

UK
SM-Cyclo UK Ltd. (SMUK)
Unit 29, Bergen Way, Sutton Fields Industrial Estate,
Kingston upon Hull, HU7 0YQ, East Yorkshire,
United Kingdom
Tel: (44)1482-790340
Fax: (44)1482-790321

China
Sumitomo(SHI) Cyclo Drive China, Ltd. (SCT)
13 Floor, No. 1698 Yishan Rd, Shanghai, China 201103
Tel: (86)21-3462-7877
Fax: (86)21-3462-7922

Hong Kong
SM-Cyclo of Hong Kong Co., Ltd. (SMHK)
Unit 1802, 18/F, Park Building, 476 Castle Peak Road,
Kowloon, Hong Kong
Tel: (852)2460-1881
Fax: (852)2460-1882

Korea
Sumitomo(SHI) Cyclo Drive Korea, Ltd. (SCK)
Royal Bldg. 9F Rm. 913, 5 Danju-Dong, Chongro-ku,
Seoul, Korea 110-721
Tel: (82)2-730-0151
Fax: (82)2-730-0156

Taiwan
Tatung SM-Cyclo Co., Ltd. (TSC)
22 Chungshan N. Road 3rd., Sec. Taipei, Taiwan 104,
R. O. C.
Tel: (886)2-2595-7275
Fax: (886)2-2595-5594

Singapore
Sumitomo(SHI)Cyclo Drive Asia Pacific Pte. Ltd.(SCA)
15 Kwong Min Road, Singapore 628718
Tel: (65)6591-7800
Fax: (65)6863-4238

Philippines
SCA Branch Office in Philippines
B2b Granville Industrial Complex, Governor's Drive, Bo,
Bancal, Carmona 4116 Cavite, Philippines
Tel: (63)2-6800-6500
Fax: (63)2-6800-6555

Vietnam
SCA Representative Office in Ho Chi Minh
Floor 4, 99 Hguyen Thi Minh Khai Street World Ben Thanh,
District 1, HCM, Vietnam
Tel: (84)8-3925-6504
Fax: (84)8-3925-6505

Malaysia
SM-Cyclo(Malaysia) Sdn. Bhd. (SMMA)
No. 2, Jalan BP 4/1, Bandar Bukit Puchong, 47100
Puchong, Selangor Darul Ehsan, Malaysia
Tel: (60)3-8061-2909
Fax: (60)3-8061-3909

Thailand
SM-Cyclo(Thailand) Co., Ltd. (SMTH)
195, Empire Tower 21st Fl., Unit 2103-4, South
Sathorn Road, Yannawa Sathorn Bangkok 10120,
Thailand
Tel: (66)2-670-0998
Fax: (66)2-670-0999

Australia
SM-Cyclo(Australia) Pty., Ltd. (SMAU)
9 Holbeche Rd, Arndell Park, NSW, 2148, Australia
Tel: (61)2-8811-6555
Fax: (61)2-8811-6500

India
Sumi-Cyclo Drive India Private Limited
Survey No. 130, Hissa No. 02, Jeevan Nagar Next to
TVS Logistics, Off Mumbai-Bangalore bypass,
Tathawade, Pune-411 033, India
Tel: (91)20-6674-2900
Fax: (91)20-6674-2901

Japan
Sumitomo Heavy Industries, Ltd.
Address: ThinkPark Tower, 1-1, Osaki 2-Chome,
Shinagawa-ku, Tokyo 141-6025, Japan
Tel: (81) 3-6737-2511
Fax: (81) 3-6866-5160

CW21

Sumitomo Heavy Industries, Ltd.

No. G2201E-2.1
Issued 2009.12

Sumitomo Drive Technologies
Always on the Move

PARAMAX® SFC Series
The Cooling Tower Drives

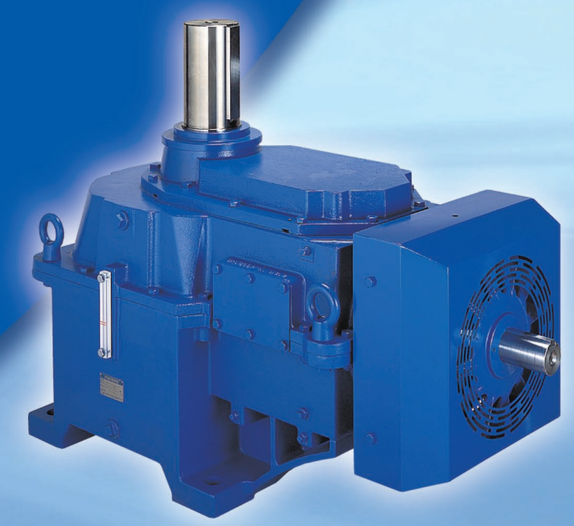

No. G2201E-2

Features

Optimised for cooling tower use

1 Selection Criteria

- The SFC Series was specifically designed for the cooling tower environment.
- Use the chart to find the correct size based on motor size and fan speed.

Motor Size vs. Fan Speed

Input Speed 1800r/min

Motor (kW) \ Fan Speed r/min	285	253	225	200	180	160	144	128	112	100
Reduction Ratio	6.3	7.1	8	9	10	11.2	12.5	14	16	18
55	SFC075	SFC075	SFC075	SFC075	SFC075	SFC075	SFC075	SFC055	SFC055	SFC055
75	SFC075	SFC075	SFC075	SFC075	SFC075	SFC075	SFC075	SFC055	SFC055	SFC055
90	SFC075	SFC075	SFC075	SFC075	SFC075	SFC055	SFC055	SFC055	SFC055	SFC055
110	SFC075	SFC075	SFC075	SFC075	SFC055	SFC055	SFC055	SFC055	SFC055	SFC060
132	SFC055	SFC055	SFC055	SFC055	SFC055	SFC055	SFC055	SFC060	SFC060	SFC065
160	SFC055	SFC055	SFC055	SFC055	SFC055	SFC060	SFC060	SFC065	SFC070	SFC070
200	SFC060	SFC060	SFC060	SFC060	SFC060	SFC065	SFC065	SFC070	SFC075	SFC075
250	SFC060	SFC060	SFC060	SFC065	SFC065	SFC070	SFC070	SFC075	SFC075	
280	SFC070	SFC070	SFC070	SFC070	SFC070	SFC070	SFC075	SFC075		

Gearbox Size: SFC045 SFC055 SFC060 SFC065 SFC070 SFC075

∗Refer to the selection table on page 5 for detatils.

2 Low Vibration Design

- Extended Bearing Span
  Even if the cooling fan is balanced, excess vibration can occur during operation.
  Using an extended fan drive shaft (gearbox low speed shaft), run-out due to fan operation is significantly reduced.
- Balanced Mounting Load
  By arranging the mounting bolt holes uniformly about the fan drive shaft, the load to the gearbox mounting base is transmitted uniformly.

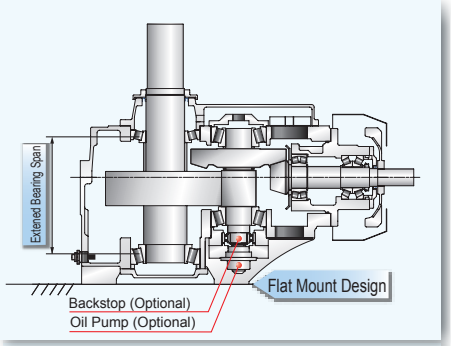

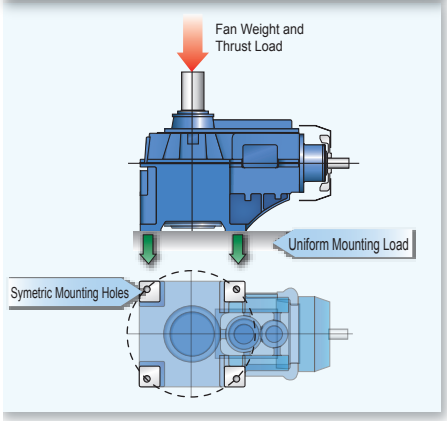

3 Flat Mount Design

The SFC gearbox is designed without protrusions beneath the mounting surface, leading to simple mounting base design and construction.
The design also takes into account the use of an optional backstop and pump to be added without protruding beneath the mounting surface.

4 Thermally Efficient Design

Due to the gearbox location in a cooling tower, minimal airflow from the cooling tower fan reaches it.
The SFC gearbox is designed with maximum heat dissipation in mind.

- Maximized Surface Area
- High Efficiency Gearbox Cooling Fan

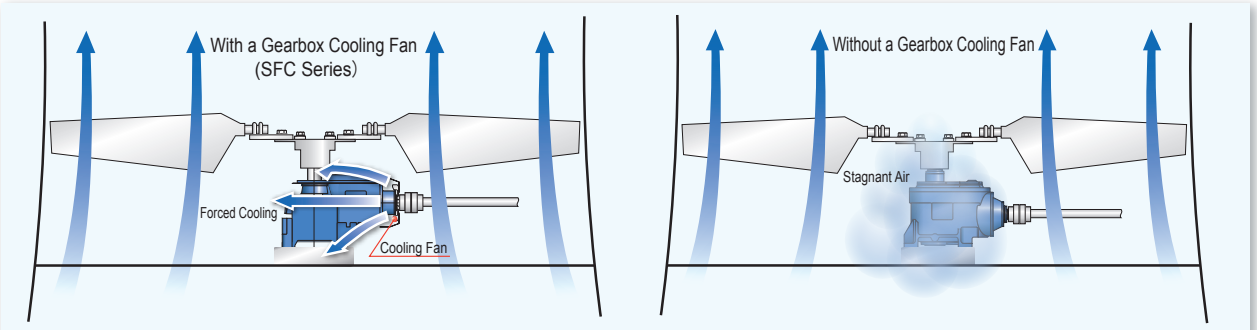

Air Flow Around the Gearbox

Low Noise

6 ～ 8dB（A）Noise Reduction From Previous Series

6 to 8dB (A) noise reduction from previous series achieved with 3D tooth surface modification in the input stage bevel gear of reducer, enabling usage in environment with strict noise restriction.

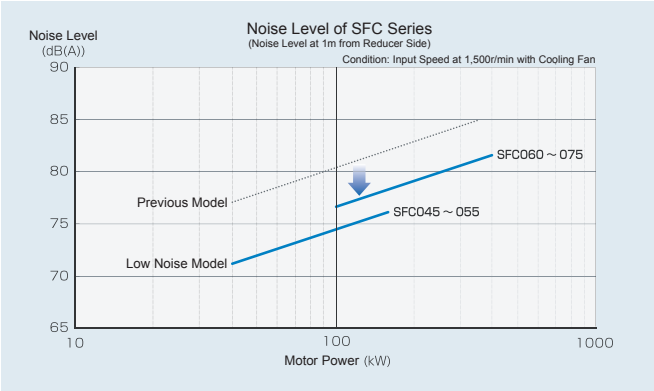

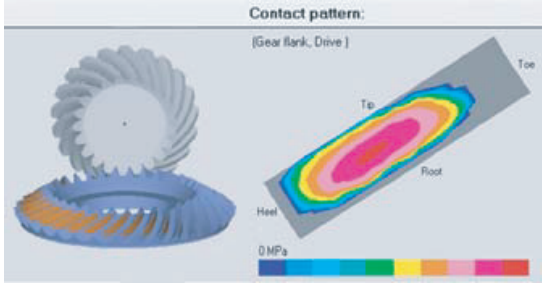

Modification is made for optimal tooth contact under load through simulation.

Ease of Maintenance

- 1 Year Maintenance free operation.
- Gearbox is drilled and tapped for attachment of external air breather and oil fill/drain.
- Internal gearbox inspection possible without draining oil due to inspection cover location above operating oil level.
- Using internal splash oil lubrication, use of an oil pump and its periodic replacement is not required.

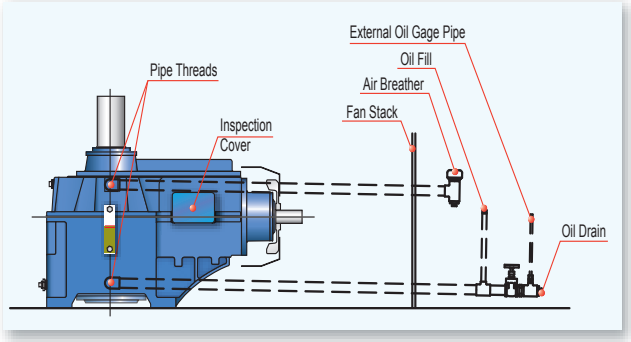

Available Accessories

Cooling Tower specific accessories are standard equipment.

Standard Equipment

Integral Cooling Fan
Oil Seal Hood (Output Shaft)
Oil Gauge
Magnetic Plug

Options

Backstop*
Oil Heater
Oil Pump
Flow Switch
Oil Level Switch
Dust-free Air Breather
Vibration Sensor Seat

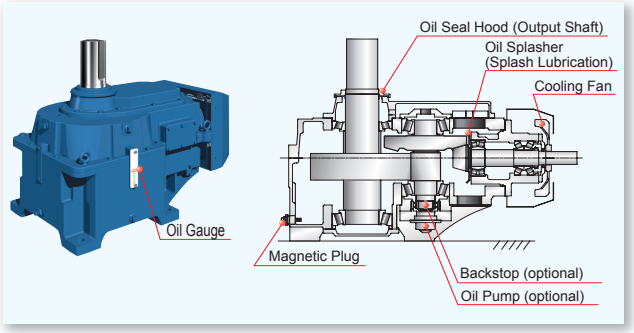

* Use of a backstop (optional) is to prevent reverse rotation of the cooling fan. Backstop uses the internal gear oil for lubrication. Grease lubrication type is also available.

Table of Contents

- Features 1
- Nomenclature.....3
- Painting Specifications 3
- Standard Specifications 4
- Lubricant Specifications 4
- Selection Procedure (kW) ...5
- Mechanical Rating Table (kW)....7
- Allowable Thrust Load (kW).....8
- Selection Procedure (HP) 9
- Mechanical Rating Table (HP) ...11
- Allowable Thrust Load (HP) ...12
- Application Data Sheet 13
- Dimensions 14

Standard Specification

Nomenclature

SFC	065	R2	G	S	—	RR	F	—	14
Series	Size / Output Torque (kNm)	Gear Stages	Suf fix 1			Shaft Arrangement	Suf fix 2		Nominal Ratio

Series	Size / Output Torque (kNm)	Gear Stages	Suf fix 1		Shaft Arrangement	Suf fix 2	Nominal Ratio
SFC	045 (10.0) 055 (18.0) 060 (21.7) 065 (27.5) 070 (35.5) 075 (44.0)	R2 Right Angle Double Reduction	G	S : Splash (Standard) P : Shaft Driven Pump	RR	F : With Cooling Fan (Standard) FB : With Cooling Fan & Backstop N : No Additional Cooling NB : With Backstop	6.3 7.1 8 9 10 11.2 12.5 14 16 18

Painting Specifications

Valuation basis : ◎··· Excellent, ○··· Good

Painting area	Classification	Kind of painting			Paint Specification		Water Resistance	Acid Resistance	Alkali Resistance	Heat Resistance	Weather-ability of finished coat
		Classification	Paint of finish coat	Type	Thickness μm	Quality					
Outside Paint*	Standard Paint	Corrosion Resistance	Acrylic modified phthalic	Under Coating	20-40	Modified alkyd resin	○	○	○	○	○
				Finish Coating	30-60	Acrylic modified alkyd resin					
	Heavy Duty Corrosion Resistant Paint 1 (Option)	Humidity Resistance	Thick film epoxy	Under Coating	40-80	Special permeability epoxy aluminium paint	◎	◎	◎	○	○
				Finish Coating	120-240	Polyamide epoxy					
	Heavy Duty Corrosion Resistant Paint 2 (Option)	Humidity Resistance & Weather-ability	Polyurethane	Under Coating	40-80	Special permeability epoxy aluminium paint	◎	◎	◎	○	◎
				Second Coating	120-240	Polyamide epoxy					
				Finish Coating	20-40	Polyisocianate urethane resin paint					
Inside Paint	Standard Paint	Oil Resistance	—	—	20-40	Modified alkyd resin	—	—	—	—	—

* One layer of modified alkyd resin paint as the first primer.

Standard Specification

Standard Specifications

Item		Standard Specification
Gearbox	Gear	Material Spec. : Alloy Steel Heat Treatment : Case Hardening Processing : Precision Finish
	Bearing	Type : Roller Bearing Rated Life (L10) : Low Speed Shaft Bearing ····· 100,000 Hours or Longer High Speed Shaft/Intermediate Shaft Bearings ··· 50,000 Hours or Longer
	Shaft	Material Spec. : Alloy Steel
	Housing	Material Spec. : Cast Iron
	Seal	Housing and Cover Mating surfaces : Liquid Sealant Low Speed Shaft : Dust-lip Oil Seal and Seal Hood High Speed Shaft : Dust-lip Oil Seal
	Lubrication	Oil Splash Lubrication An oil splasher attached to the high speed shaft propels oil from the lower oil reservoir to the upper bearing oil reservoir.
	Paint	P3 Reference
	Rotation Speed	High Speed Shaft input speed: 450 to 1800r/min
External Conditions	Ambient Temperature	0℃ to 40℃
	Environment	Not designed for corrosive or explosive gas environments.
	Altitude	Designed for altitudes of 1000m or less.

Lubricant Specifications

● Mineral Oil

Brand	ARAL	BP	CASTROL	CHEVRON	EXXON MOBIL	GULF	OPTIMOL	SHELL	TEXACO	TOTAL FINA ELF	THIBOL
ISO VG320 AGMA 6EP	DEGOL BG320	ENERGOL GR-XP-320	ALPHA SP320	GEAR COMPOUNS EP320	MOBIL-GEAR 600 XP320	EP LUBRI-CANT HD320	OPTIGEAR BM 320	OMALA 320	MEROPA WM 320	CARTER EP320	THIBOL 1100/320

● Synthetic Oil

Brand	EXXONMOBIL	
ISO VG320 AGMA 6S	MOBIL GEAR SHC XMP 320	MOBIL GEAR SHC 320

Selection Procedure

Quick Selection Table

kW

● Input Shaft Speed 1750r/min

	Fan Speed r/min	280	245	220	195	175	155	140	125	110	97
	Reduction Ratio	6.3	7.1	8	9	10	11.2	12.5	14	16	18
Motor (kW)	55	※	※	※	※	※	045	045	※	※	※
	75	※	045	045	045	045	045	045	055	055	055
	90	※	045	045	045	045	055	055	055	055	055
	110	※	045	045	055	055	055	055	055	055	060
	132	※	※	055	055	055	055	055	060	065	065
	160	※	※	055	055	055	060	060	065	070	070
	200	※	※	※	060	060	065	065	070	075	075
	250	※	※	※	※	065	070	070	075	075	—
	280	※	※	※	※	※	070	075	075	—	—

● Input Shaft Speed 1160r/min

	Fan Speed r/min	185	165	145	130	115	105	93	83	73	64
	Reduction Ratio	6.3	7.1	8	9	10	11.2	12.5	14	16	18
Motor (kW)	55	※	045	045	045	045	055	055	055	055	055
	75	※	045	045	055	055	055	055	055	055	060
	90	※	※	055	055	055	055	060	060	065	070
	110	※	※	055	055	055	060	065	065	070	070
	132	060	060	060	060	060	065	065	070	075	075
	160	060	060	060	065	065	065	070	070	075	
	200	065	065	065	065	070	075	075	075		
	250	065	070	070	075	075	075				
	280					075					

● Input Shaft Speed 1450r/min

	Fan Speed r/min	230	205	180	160	145	130	115	105	91	81
	Reduction Ratio	6.3	7.1	8	9	10	11.2	12.5	14	16	18
Motor (kW)	55	※	※	※	045	045	045	045	※	※	※
	75	※	045	045	045	045	055	055	055	055	055
	90	※	045	045	045	055	055	055	055	055	060
	110	※	※	055	055	055	055	055	060	065	065
	132	※	※	055	055	055	060	060	065	070	070
	160	※	※	060	060	060	065	065	065	075	075
	200	※	※	060	065	065	065	070	070	075	075
	250	※	※	065	065	070	075	075	075	※	※
	280	※	※	※	070	070	075	075	※	※	※

● Input Shaft Speed 970r/min

	Fan Speed r/min	155	135	120	110	97	87	78	69	61	54
	Reduction Ratio	6.3	7.1	8	9	10	11.2	12.5	14	16	18
Motor (kW)	55	※	045	045	045	045	055	055	055	055	055
	75	※	※	055	055	055	055	055	060	065	065
	90	※	※	055	055	055	060	060	065	070	070
	110	060	060	060	060	060	065	065	070	075	075
	132	060	060	060	065	065	065	070	075	075	※
	160	065	065	065	065	070	070	075	075	※	※
	200	065	065	070	075	075	075	075	※	※	※
	250	※	※	※	※	※	※	※	※	※	※
	280	※	※	※	※	※	※	※	※	※	※

Attention
1) ※ symbol indicates a non-standard application. Inquire with Sumitomo for details.
2) For more specific details please use the selection method on page 6.

Selection Procedure

kW

● Selection Order

Item	Selection Method	Reference Page
Determine Reduction Ratio	Reduction Ratio ＝ Motor Speed ÷ Fan Speed	———
Determine the Service Factor (SF)	SF = 2.0	———
Determine the Reducer Size	Motor Power ≦ Mechanical Rating (Service Factor 2.0)	P.7 Rating Table
Thrust Load	Actual Thrust Load ≦ Allowable Thrust Load on Slow Speed Shaft Conservatively calculated, Actual Thrust Load = Fan Thrust Load + Fan Weight	P.8 Allowable Thrust Load on Slow Speed Shaft
Ambient Temperature	Standard ambient temperature operating range 0 ～ 40℃	———
Input Shaft Rotating Speed	Standard Input Shaft operating range 450 ～ 1800r/min	———

Attention

1) Thrust load is the downward thrust load due to the weight and rotation of the cooling fan in the clockwise direction.
2) Allowable thrust load is based on a bearing life of 100,000 hours. Please inquire about cases above the 100,000 hour limit.
3) Please inquire about operating ambient temperature that exceed the 0℃ to 40℃ range.
4) Please inquire about input shaft operating speeds lower than 450 r/min or higher than 1800 r/min.

● Selection Example

Required Specifications

Use	: Cooling Tower
Motor Power	: 132kW × 1500r/min
Cooling Fan Speed	: 107 r/min
Actual Thrust Load	: 14.7kN
Rotation Direction	: Clockwise rotation
Ambient Temperature	: 0 to 40℃
Backstop	: Yes

Selection

1. Determine Reduction Ratio
   Motor Speed/Fan Speed ＝ 14
2. Determine the Service Factor ····· SF=2.0
3. Determine the Size
   Transfer Capacity (Motor Rating) ≦ Mechanical Rating @ SF2.0
   From Rating Table SFC065R2S-14 Ratio 14
   132<160kW (Mechanical Rating @SF2.0) ····· OK
4. Check Thrust Load
   Low Speed Shaft Allowable Thrust Load
   14.7kN ＜ 28kN ····· OK
5. Check Ambient Temperature
   Operating Ambient Temperature 0 ～ 40℃····· OK
6. Check Input Shaft Operating Range
   1500r/min Fixed Speed is within the 450-1800r/min
   operating limits ····· OK
7. With Backstop

Based on the selection criteria above, SFC065R2S-RRFB-14 is selected

Rating Table

Service Factor 2.0 — kW

Unit : kW

Nominal Ratio	Input Speed r/min	Output Speedr/min	Size 045	055	060	065	070	075
6.3	Exact Ratio		※	※	6.188	6.426	6.188	
	1750	280	※	※	※	※	※	
	1450	230	※	※	※	※	※	
	1160	185	※	※	191	227	260	
	970	155	※	※	155	195	225	
7.1	Exact Ratio		7.320	※	7.210	6.927	6.933	
	1750	245	115	※	※	※	※	
	1450	205	99	※	※	※	※	
	1160	165	77	※	189	216	260	
	970	135	64	※	154	186	225	
8	Exact Ratio		8.338	7.955	7.875	8.118	8.082	
	1750	220	115	167	※	※	※	
	1450	180	99	136	227	248	※	
	1160	145	77	112	188	205	286	
	970	120	64	91	152	177	231	
9	Exact Ratio		8.889	8.938	9.176	8.750	9.056	8.597
	1750	195	105	167	223	※	※	※
	1450	160	91	136	180	235	287	324
	1160	130	70	112	150	195	230	264
	970	110	59	91	122	164	193	221
10	Exact Ratio		10.125	10.125	9.995	10.028	10.125	10.007
	1750	175	95	171	211	256	※	※
	1450	145	79	144	176	218	285	※
	1160	115	64	115	140	179	229	280
	970	97	55	96	117	145	186	234
11.2	Exact Ratio		11.624	11.375	11.647	10.809	11.345	11.229
	1750	155	78	142	171	235	284	※
	1450	130	65	119	143	204	230	304
	1160	105	52	96	115	164	192	252
	970	87	43	80	96	133	160	205
12.5	Exact Ratio		13.240	12.462	12.469	12.756	12.797	12.536
	1750	140	75	138	161	202	257	340
	1450	115	61	115	135	163	208	291
	1160	93	49	94	105	135	167	234
	970	78	41	77	90	113	139	201
14	Exact Ratio		※	14.000	14.529	13.750	14.338	14.067
	1750	125	※	116	138	193	233	301
	1450	105	※	97	115	161	201	252
	1160	83	※	78	95	125	162	202
	970	69	※	66	77	105	131	164
16	Exact Ratio		※	15.188	15.392	15.889	15.750	15.844
	1750	110	※	113	131	151	188	257
	1450	91	※	94	106	122	151	208
	1160	73	※	75	85	97	122	167
	970	61	※	61	71	82	101	139
18	Exact Ratio		※	17.062	17.936	17.500	17.647	17.779
	1750	97	※	96	112	133	185	232
	1450	81	※	80	94	111	150	201
	1160	64	※	65	75	89	120	156
	970	54	※	55	63	77	101	131

Attention

1) When the desired input speed is not shown, use interpolation to determine the appropriate values.
2) When input speed (N) is below 970 r/min, use the following formula to determine the mechanical power rating (P_N) $P_N = P_{970} \times \frac{N}{970}$
3) Please inquire with us when input shaft speed exceeds 1800r/min.
4) ※ Please inquire with us about these categories.
5) - No information available.

Allowable Thrust Load on Slow Speed Shaft

kW

Unit : kN

Output Shaft Speed (r/min)	Size					
	045	055	060	065	070	075
≦ 300	16	25	22	28	29	50
≦ 150	18	27	27	28	31	50
≦ 100	21	29	30	34	39	50

Selection Procedure

Quick Selection Table

HP

● Input Shaft Speed 1750r/min

	Fan Speed r/min	280	245	220	195	175	155	140	125	110	97
	Reduction Ratio	6.3	7.1	8	9	10	11.2	12.5	14	16	18
Motor (HP)	75	※	※	※	※	※	045	045	※	※	※
	100	※	045	045	045	045	045	045	055	055	055
	125	※	045	045	045	045	055	055	055	055	055
	150	※	045	045	055	055	055	055	055	055	060
	175	※	※	055	055	055	055	055	060	060	065
	200	※	※	055	055	055	060	060	065	065	070
	250	※	※	※	060	060	065	065	065	070	075
	300	※	※	※	※	065	065	070	070	075	075
	350	※	※	※	※	※	070	075	075	※	※

● Input Shaft Speed 1160r/min

	Fan Speed r/min	185	165	145	130	115	105	93	83	73	64
	Reduction Ratio	6.3	7.1	8	9	10	11.2	12.5	14	16	18
Motor (HP)	75	※	045	045	045	045	055	055	055	055	055
	100	※	045	045	055	055	055	055	055	055	060
	125	※	※	055	055	055	055	055	060	065	070
	150	※	※	055	055	055	060	065	065	070	070
	175	060	060	060	060	060	065	065	070	075	075
	200	060	060	060	060	065	065	070	070	075	075
	250	060	060	065	065	070	070	075	075	※	※
	300	065	070	070	070	070	075	075	※	※	※
	350	※	※	070	075	075	※	※	※	※	※

● Input Shaft Speed 1450r/min

	Fan Speed r/min	230	205	180	160	145	130	115	105	91	81
	Reduction Ratio	6.3	7.1	8	9	10	11.2	12.5	14	16	18
Motor (HP)	75	※	※	※	045	045	045	045	※	※	※
	100	※	045	045	045	045	055	055	055	055	055
	125	※	045	045	055	055	055	055	055	055	060
	150	※	※	055	055	055	055	055	060	065	070
	175	※	※	055	055	055	060	060	065	070	070
	200	※	※	060	060	060	065	065	065	070	070
	250	※	※	060	065	065	065	070	070	075	075
	300	※	※	065	065	070	070	075	075	※	※
	350	※	※	※	070	070	075	075	※	※	※

● Input Shaft Speed 970r/min

	Fan Speed r/min	155	135	120	110	97	87	78	69	61	54
	Reduction Ratio	6.3	7.1	8	9	10	11.2	12.5	14	16	18
Motor (HP)	75	※	045	045	045	055	055	055	055	055	060
	100	※	※	055	055	055	055	055	060	065	065
	125	※	※	060	060	055	060	065	065	070	070
	150	060	060	060	060	060	065	065	070	075	075
	175	060	060	060	065	065	065	070	070	075	075
	200	060	060	060	065	070	070	075	075	※	※
	250	065	065	070	070	075	075	075	※	※	※
	300	070	070	070	※	075	※	※	※	※	※
	350	※	※	※	※	※	※	※	※	※	※

Attention
1) ※ symbol indicates a non-standard application. Inquire with Sumitomo for details.
2) For more specific details please use the selection method on page 10.

Selection Procedure

HP

● Selection Order

Item	Selection Method	Reference Page
Determine Reduction Ratio	Reduction Ratio ＝ Motor Speed ÷ Fan Speed	———
Determine the Service Factor (SF)	SF = 2.0	———
Determine the Reducer Size	Motor Power ≦ Mechanical Rating (Service Factor 2.0)	P.11 Rating Table
Thrust Load	Actual Thrust Load ≦ Allowable Thrust Load on Slow Speed Shaft Conservatively calculated, Actual Thrust Load = Fan Thrust Load + Fan Weight	P.12 Allowable Thrust Load on Slow Speed Shaft
Ambient Temperature	Standard ambient temperature operating range 0 ～ 40℃	———
Input Shaft Rotating Speed	Standard Input Shaft operating range 450 ～ 1800r/min	———

Attention

1) Thrust load is the downward thrust load due to the weight and rotation of the cooling fan in the clockwise direction.
2) Allowable thrust load is based on a bearing life of 100,000 hours. Please inquire about cases above the 100,000 hour limit.
3) Please inquire about operating ambient temperature that exceed the 0℃ to 40℃ range.
4) Please inquire about input shaft operating speeds lower than 450 r/min or higher than 1800 r/min.

● Selection Example

Required Specifications

Use	: Cooling Tower
Motor Power	: 200HP × 1750r/min
Cooling Fan Speed	: 107 r/min
Actual Thrust Load	: 14.7kN
Rotation Direction	: Clockwise rotation
Ambient Temperature	: 0 to 40℃
Backstop	: Yes

Selection

1. Determine Reduction Ratio
   Motor Speed/Fan Speed ＝ 14
2. Determine the Service Factor ····· SF=2.0
3. Determine the Size
   Transfer Capacity (Motor Rating) ≦ Mechanical Rating @ SF2.0
   From Rating Table SFC065R2S-16 Ratio 16
   200<202HP (Mechanical Rating @SF2.0) ····· OK
4. Check Thrust Load
   Low Speed Shaft Allowable Thrust Load
   14.7kN ＜ 28kN ····· OK
5. Check Ambient Temperature
   Operating Ambient Temperature 0 ～ 40℃ ····· OK
6. Check Input Shaft Operating Range
   1750r/min Fixed Speed is within the 450-1800r/min
   operating limits ····· OK
7. With Backstop

Based on the selection criteria above, SFC065R2S-RRFB-16 is selected

Rating Table

Service Factor 2.0 — HP

Unit : HP

Nominal Ratio	Input Speed r/min	Output Speedr/min	Size 045	055	060	065	070	075
6.3	Exact Ratio		※	※	6.188	6.426	6.188	
	1750	280	※	※	※	※	※	
	1450	230	※	※	※	※	※	
	1160	185	※	※	256	304	349	
	970	155	※	※	208	261	302	
7.1	Exact Ratio		7.320	※	7.210	6.927	6.933	
	1750	245	154	※	※	※	※	
	1450	205	133	※	※	※	※	
	1160	165	103	※	253	289	349	
	970	135	86	※	207	249	302	
8	Exact Ratio		8.338	7.955	7.875	8.118	8.082	
	1750	220	154	224	※	※	※	
	1450	180	133	182	304	332	※	
	1160	145	103	150	252	274	354	
	970	120	86	122	204	237	310	
9	Exact Ratio		8.889	8.938	9.176	8.750	9.056	8.597
	1750	195	141	224	299	※	※	※
	1450	160	122	182	241	315	385	434
	1160	130	94	150	201	261	308	354
	970	110	79	122	164	220	259	296
10	Exact Ratio		10.125	10.125	9.995	10.028	10.125	10.007
	1750	175	127	229	283	343	※	※
	1450	145	106	193	236	292	382	※
	1160	115	86	154	188	240	307	375
	970	97	74	129	157	194	249	314
11.2	Exact Ratio		11.624	11.375	11.647	10.809	11.345	11.229
	1750	155	105	190	229	315	381	※
	1450	130	87	160	192	274	308	408
	1160	105	70	129	154	220	257	338
	970	87	58	107	129	178	215	275
12.5	Exact Ratio		13.240	12.462	12.469	12.756	12.797	12.536
	1750	140	101	185	216	271	345	456
	1450	115	82	154	181	219	279	390
	1160	93	66	126	141	181	224	314
	970	78	55	103	121	152	186	270
14	Exact Ratio		※	14.000	14.529	13.750	14.338	14.067
	1750	125	※	156	185	259	312	404
	1450	105	※	130	154	216	270	338
	1160	83	※	105	127	168	217	271
	970	69	※	89	103	141	176	220
16	Exact Ratio		※	15.188	15.392	15.889	15.750	15.844
	1750	110	※	152	176	202	252	345
	1450	91	※	126	142	164	202	279
	1160	73	※	101	114	130	164	224
	970	61	※	82	95	110	135	186
18	Exact Ratio		※	17.062	17.936	17.500	17.647	17.779
	1750	97	※	129	150	178	248	311
	1450	81	※	107	126	149	201	270
	1160	64	※	87	101	119	161	209
	970	54	※	74	84	103	135	176

Attention

1) When the desired input speed is not shown, use interpolation to determine the appropriate values.
2) When input speed (N) is below 970 r/min, use the following formula to determine the mechanical power rating (P_N) $P_N = P_{970} \times \frac{N}{970}$
3) Please inquire with us when input shaft speed exceeds 1800r/min.
4) ※ Please inquire with us about these categories.
5) No information available.

Allowable Thrust Load on Low Speed Shaft

HP

Unit : kN

Output Shaft Speed (r/min)	Size					
	045	055	060	065	070	075
≦ 300	16	25	22	28	29	50
≦ 150	18	27	27	28	31	50
≦ 100	21	29	30	34	39	50

Application Data Sheet

Enter the required specifications below when inquiring about SFC series reducers.

1.Load Conditions

	No.	Items	Required specification
Motor	1	Motor Type (AC, Pole Change or Inverter)	
	2	Motor Power	kW
	3	Maximum Start-up Power	kW
	4	Absord Power	kW
	5	Input Shaft Speed (Min・Max)	Min r/min Max r/min
Output shaft	6	Output Shaft Speed (Min・Max)	Min r/min Max r/min
	7	Thrust Load (Fan Thrust + Fan Mass)	kN
	8	Output Shaft Rotation Direction (View from the shaft end)	
	9	Maximum Torque	kNm

2.Installation Environment

	No.	Items	Required specification
Temperature	10	Ambient Temperature Around the Gearbox 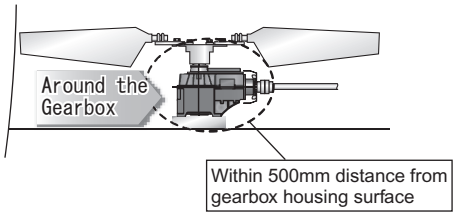	Minimum / Maximum testing degC Starting degC Operating degC Customer comment:
	11	Temperature outside of stack	degC
	12	Temperature of cooling water	degC
Environment	13	Country (area)	
	14	Condition of location (coast, suburbs or others)	
	15	Corrosive Gas (ex. Hydrogen Sulfide etc.)	Yes (Please describe:), No

3.Cooling tower structure

	No.	Items	Required specification
Fan blade	16	Method of fixing fan blade (Rigid or Flexible)	
	17	Disc diameter 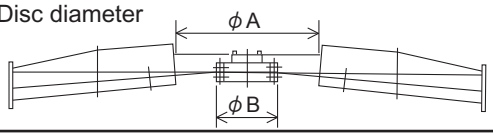	ϕ A mm ϕ B mm (Detailed review is required, when sunshade effect can not be expected.)
Structure	18	Material (concrete, steel, wood or FRP) of cooling tower structure	・Structure: ・Base plate:
	19	Supporting structure underneath the gearbox (Yes or No.)	

4.Plant type cooling tower equipment

	No.	Items	Required specification
Plant type	20	Example. ・Power generation (Geothermal power, Natural gas or others) ・Steel ・Chemistry ・Oil refinement ・Others (Cement, Medicine or others)	

Note,

[ ] Data must be specified for indicated items by the thick frame.

Dimensions

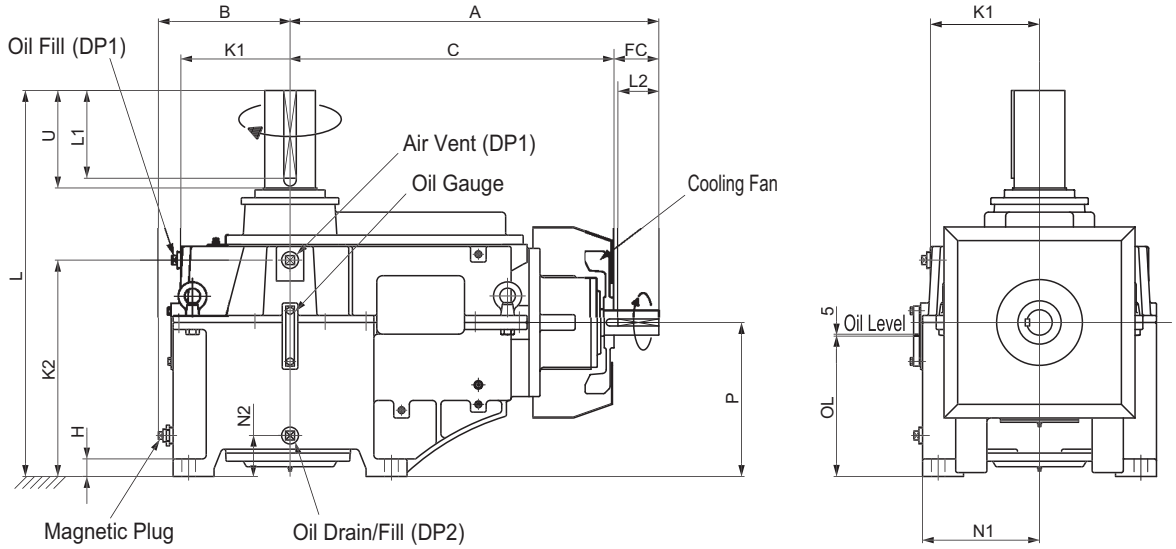

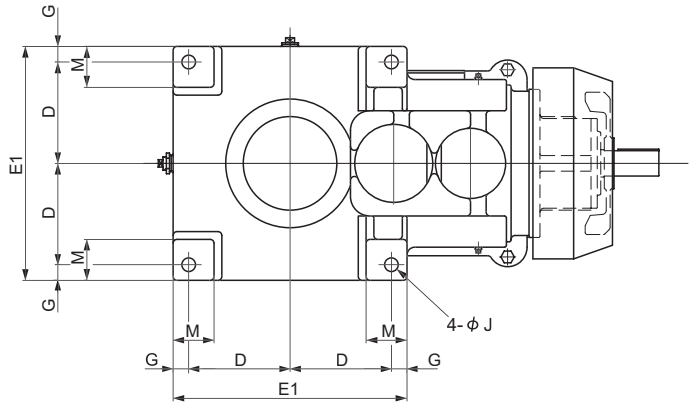

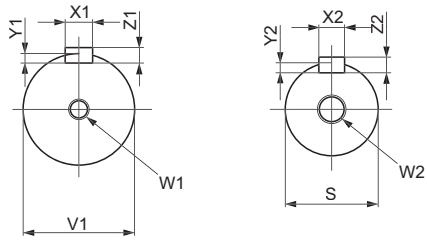

Low Speed Shaft High Speed Shaft

Unit: mm

Size	A	B	C	D	E1	G	H	J (Installation Bolt)		L	P	M	Weight (kg)	Oil Q'ty (Liters)	OL
045	725	260	645	200	470	35	38	28	(M24)	725	290	95	365	24	260
055	794	290	714	225	530	40	40	35	(M30)	795	320	105	435	34	290
060	865	305	750	240	560	40	45	35	(M30)	900	370	105	660	55	335
065	946	325	831	260	600	40	45	35	(M30)	990	395	105	830	75	360
070	965	350	850	275	650	50	52	42	(M36)	1010	415	135	960	90	375
075	1018	370	903	295	690	50	52	42	(M36)	1045	450	135	1250	110	410

Size	Low Speed Shaft							High Speed Shaft							Pipe Thread					
	V1	U1	L1	X1	Y1	Z1	W1/Depth	S	FC	L2	X2	Y2	Z2	W2/Depth	DP1	K1	K2	DP2	N1	N2
045	100m6	210	190	28	10	16	M24/50	45k6	80	80	14	5.5	9	M16/36	R1	190	393	R1 1/4	235	80
055	110m6	210	190	28	10	16	M24/50	50k6	80	80	14	5.5	9	M16/36	R1	210	445	R1 1/4	265	100
060	120m6	210	185	32	11	18	M24/50	60m6	115	105	18	7	11	M20/42	R1 1/4	260	505	R1 1/4	280	105
065	130m6	250	225	32	11	18	M24/50	65m6	115	105	18	7	11	M20/42	R1 1/4	280	555	R1 1/4	300	105
070	140m6	250	225	36	12	20	M30/60	65m6	115	105	18	7	11	M20/42	R1 1/4	290	575	R1 1/4	325	105
075	150m6	250	225	36	12	20	M30/60	65m6	115	105	18	7	11	M20/42	R1 1/4	310	610	R1 1/4	345	105

Attention

(1) Keys and keyways for both high speed and low speed shafts conform to ISO/R773-1969 close key. (JIS B 1301-1996 Parallel Key in Fastening Type)
(2) The oil quantity shown is approximate. Fill to the appropriate level using the oil level gauge.
(3) Air breather and air breather pipe are assembled by the customer and installed on site. A pipe extending from the gearbox to outside the fan stack should be prepared. Piping parts are not included.
(4) The installation bolts should be rated JIS Class 8.8 .
(5) To maintain coupling alignment, stop plates or knock pins should be installed to prevent gearbox twisting on its base due to fan operation.

ISO9001
PTC OKAYAMA GB PLANT

Warranty

The scope of our warranty for our products is limited to the range of our manufacture.
Warranty(Period and contents)

Warranty Period	The warranty period for the Product shall be 18 months after the shipment of the Product from the Seller's works or 12 months after the Product comes into operation, whichever comes first.
Warranty Condition	In the event that any problem or damage to the Product arises during the "Warranty Period" from defects in the Product whenever the Product is properly installed and combined with the Buyer's equipment or machines, maintained as specified in the maintenance manual, and properly operated under the conditions described in the catalog or as otherwise agree upon in writing between the Seller and the Buyer or its customers; the Seller will provide, at its sole discretion, appropriate repair or replacement of the Product without charge, except as stipulated in the "Exception for Warranty" as described below. However, if the Product is installed or integrated into the Buyer's equipment or machines, the Seller shall not reimburse the cost of: removal or re-installation of the Product or other incidental costs related thereto, any lost opportunity, any profit loss or other incidental or consequential losses or damages incurred by the Buyer or its customers.
Exception for Warranty	Not withstanding the above warranty, the warranty as set forth herein shall not apply to any problem or damage to the Product that is caused by: 1. installation, connection, combination or integration of the Product in or to the other equipment or machine that is rendered by any person or entity other than the Seller; 2. insufficient maintenance or improper operation by the Buyer or its customers, such that the Product is not maintained in accordance with the maintenance manual provided or designated by the Seller; 3. improper use or operation of the Product by the Buyer or its customers that is not informed to the Seller, including, without limitation, the Buyer's or its customers' operation of the Product not in conformity with the specifications, or use of lubrication oil in the Product that is not recommended by the Seller; 4. any problem or damage on any equipment or machine to which the Product is installed, connected or combined or on any specifications particular to the Buyer or its customers; 5. any changes, modifications, improvements or alterations to the Product or those functions that are rendered on the Product by any person or entity other than the Seller; 6. any parts in the Product that are supplied or designated by the Buyer or its customers; 7. earthquake, fire, flood, sea-breeze, gas, thunder, acts of God or any other reasons beyond the control of the Seller; 8. waste, exhaustion, normal wear and tear, or deterioration of the Product's parts, such as bearings, oil-seals; 9. any other troubles, problems or damages to the Product that are not attributable to the Seller.

⚠ SAFETY PRECAUTIONS

- Strictly observe the safety rules for the installation place and the equipment to use.
  (Industrial Safety and Health Law, Technical Standard for Electric Facilities, Extension Rules, Plant Explosion Guidelines, Building Standards Law, etc.)
- Carefully read the maintenance manual before use. If the maintenance manual is not on hand, make a request for one to the distributor at which you purchased the product or to our sales department. The maintenance manual should be sent to the actual user.
- Select an appropriate product that matches the operating environment and usage.
- Install a protective equipment on the machine side when the machine is used for transportation of passengers or for elevators, escalators, and dumbwaiters.
- When the machine is used for food processing equipment and others that are susceptible to oil, install an oil pan or other damage preventive devices in case of oil leakage due to failure or termination of service life.